Answer these questions on your whiteboards

A

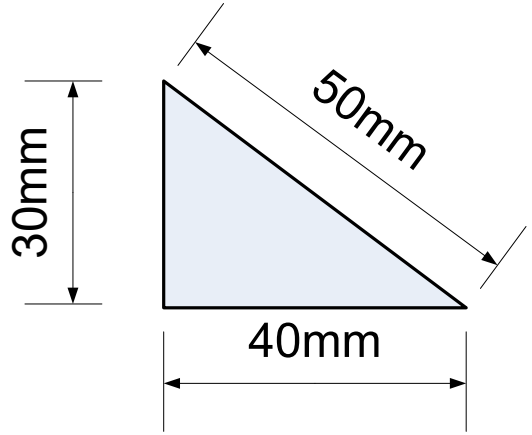

Find the perimeter of the triangle above.

B

The rectangles are all congruent.
Find the perimeter.

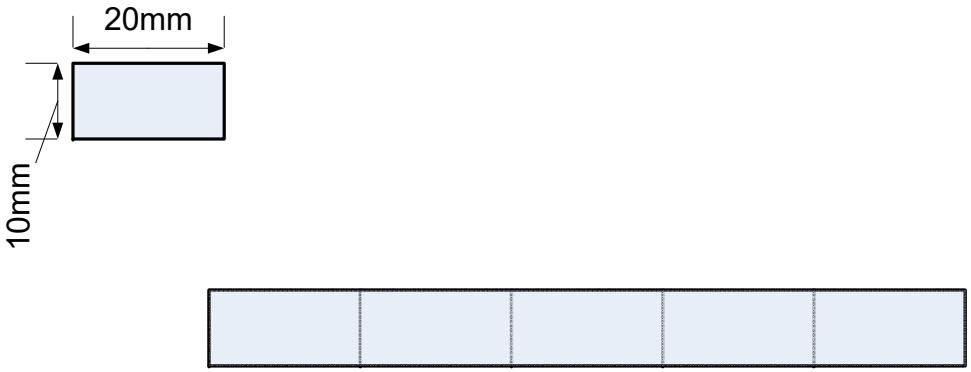

www.achildsguideto.com

C

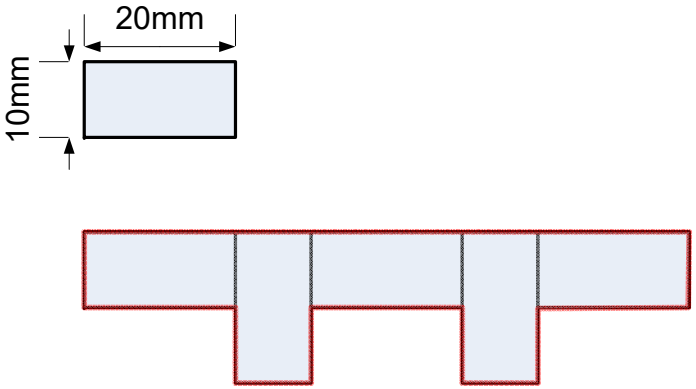

All the rectangles are congruent. What is the length of the red line?

D
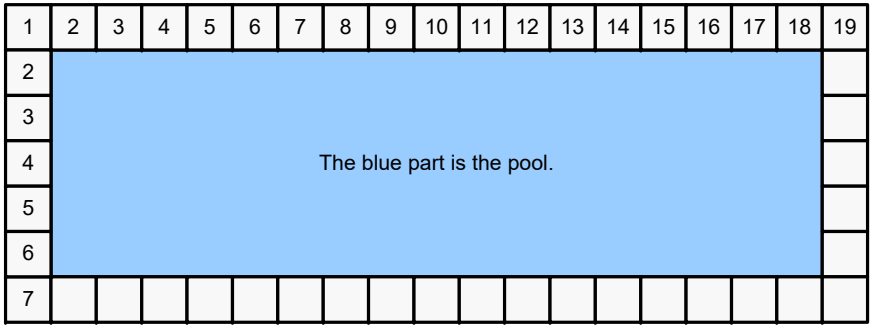
How many paving slabs border the pool in the diagram below?